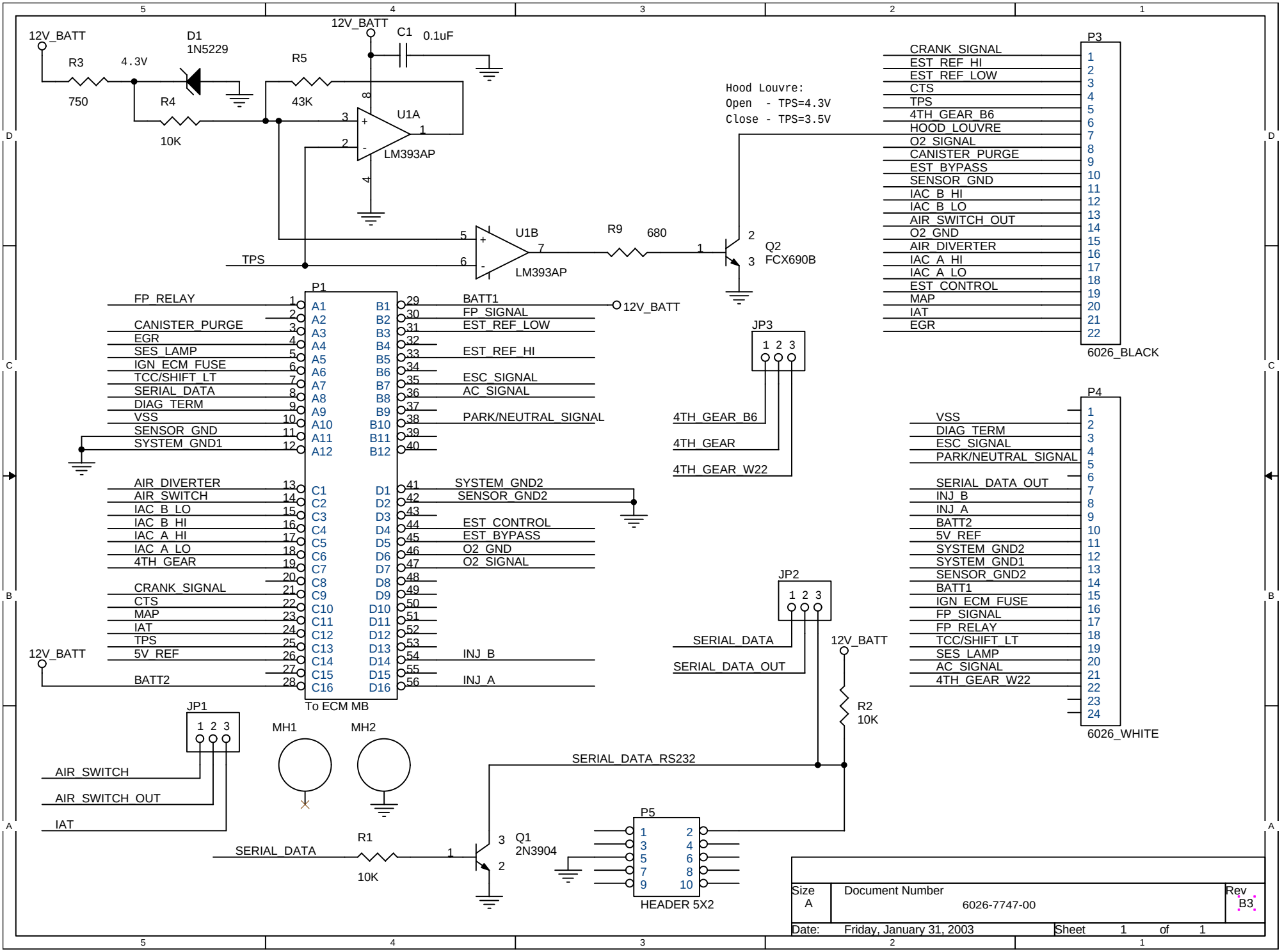
12V_BATT
R3
750
4.3V
D1
1N5229
R4
10K
R5
43K
C1
0.1uF
U1A
LM393AP
U1B
LM393AP
TPS
R9
680
Q2
FCX690B
Hood Louvre:
Open - TPS=4.3V
Close - TPS=3.5V
P3
CRANK_SIGNAL
EST_REF_HI
EST_REF_LOW
CTS
TPS
4TH_GEAR_B6
HOOD_LOUVRE
O2_SIGNAL
CANISTER_PURGE
EST_BYPASS
SENSOR_GND
IAC_B_HI
IAC_B_LO
AIR_SWITCH_OUT
O2_GND
AIR_DIVERTER
IAC_A_HI
IAC_A_LO
EST_CONTROL
MAP
IAT
EGR
6026_BLACK
P1
FP_RELAY
CANISTER_PURGE
EGR
SES_LAMP
IGN_ECM_FUSE
TCC/SHIFT_LT
SERIAL_DATA
DIAG_TERM
VSS
SENSOR_GND
SYSTEM_GND1
AIR_DIVERTER
AIR_SWITCH
IAC_B_LO
IAC_B_HI
IAC_A_HI
IAC_A_LO
4TH_GEAR
CRANK_SIGNAL
CTS
MAP
IAT
TPS
5V_REF
BATT2
BATT1
FP_SIGNAL
EST_REF_LOW
EST_REF_HI
ESC_SIGNAL
AC_SIGNAL
PARK/NEUTRAL_SIGNAL
SYSTEM_GND2
SENSOR_GND2
EST_CONTROL
EST_BYPASS
O2_GND
O2_SIGNAL
INJ_B
INJ_A
To ECM MB
JP3
4TH_GEAR_B6
4TH_GEAR
4TH_GEAR_W22
P4
VSS
DIAG_TERM
ESC_SIGNAL
PARK/NEUTRAL_SIGNAL
SERIAL_DATA_OUT
INJ_B
INJ_A
BATT2
5V_REF
SYSTEM_GND2
SYSTEM_GND1
SENSOR_GND2
BATT1
IGN_ECM_FUSE
FP_SIGNAL
FP_RELAY
TCC/SHIFT_LT
SES_LAMP
AC_SIGNAL
4TH_GEAR_W22
6026_WHITE
JP2
SERIAL_DATA
SERIAL_DATA_OUT
R2
10K
JP1
AIR_SWITCH
AIR_SWITCH_OUT
IAT
MH1
MH2
SERIAL_DATA_RS232
SERIAL_DATA
R1
10K
Q1
2N3904
P5
HEADER 5X2
Size
A
Document Number
6026-7747-00
Rev
B3
Date: Friday, January 31, 2003
Sheet 1 of 1